BT	BHUTAN

Diagram / Parts List

DCO180

CORDLESS CUT-OUT TOOL

2023/01

(BT) DCO180 / CORDLESS CUT-OUT TOOL

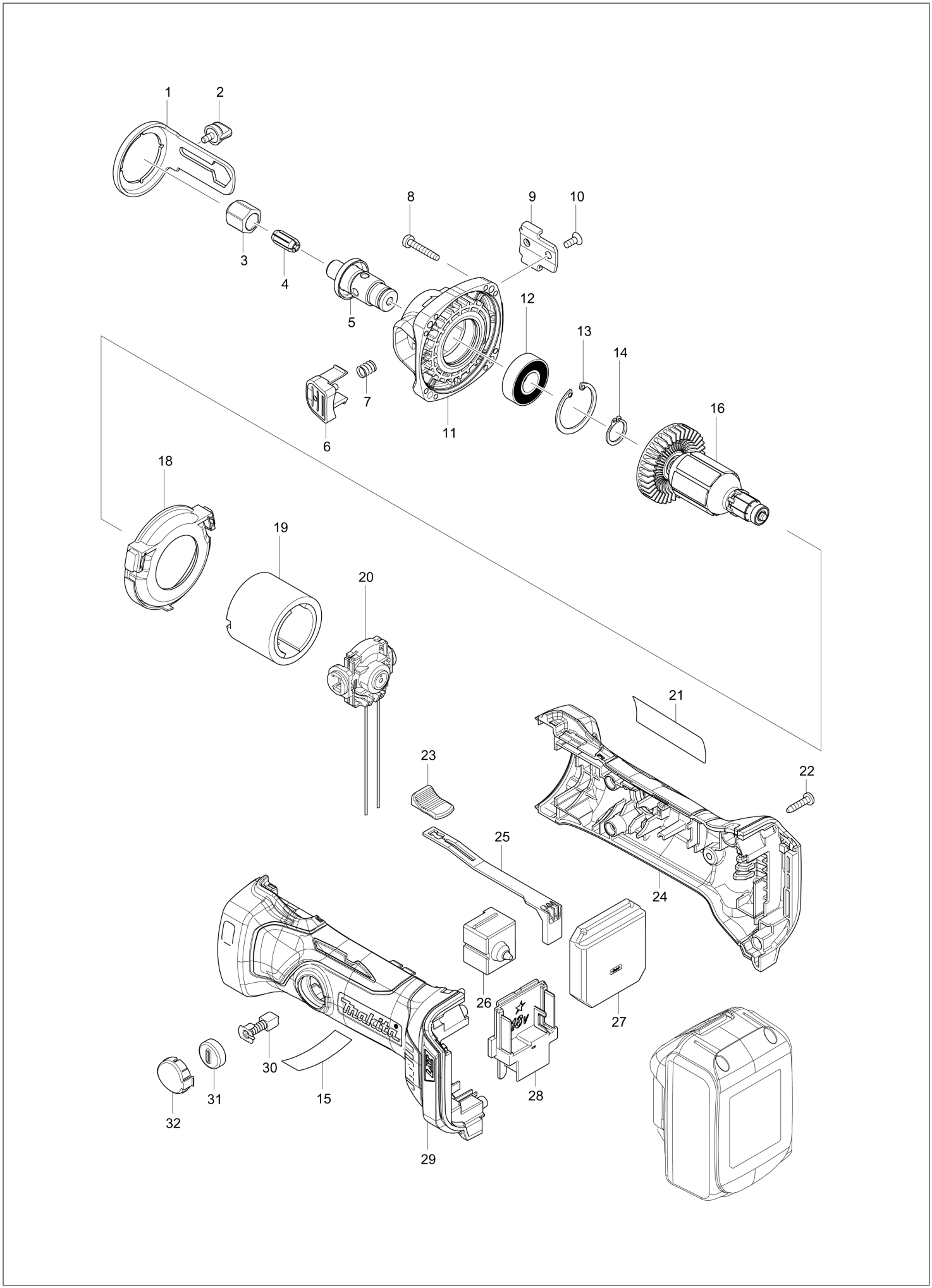

BT	BHUTAN

DCO180 / CORDLESS CUT-OUT TOOL

Item	Sub	Parts No.	Parts Description	Qty	I/C	E/C No.	Close No.	Remark
001		346796-2	SHOE PLATE	1				
002		266898-7	THUMB SCREW M4X8	1				
003		763675-3	COLLET NUT	1			D3145	
003-1		763258-9	COLLET NUT	1	O	D3145		
004		763677-9	COLLET CONE 3.18	1			B2168	
004-1		763676-1	COLLET CONE 6.35	1	<	B2168		
005		142656-4	SPINDLE COMPLETE	1				
006		455181-9	SHAFT LOCK	1				
007		234332-5	COMPRESSION SPRING 7	1				
008		266374-1	TAPPING SCREW 4X25	4				
009		346795-4	SHOE SUPPORT	1				
010		912107-9	COUNTERSUNK HEAD SCREW M4X8	1				
011		142655-6	BEARING BOX COMPLETE	1				
012		211236-8	BALL BEARING 6002DDW	1				
013		962151-6	RETAINING RING R-32	1				
014		961055-9	RETAINING RING S-15	1				
016		619344-3	ARMATURE	1				
018		455182-7	BAFFLE PLATE	1				
019		638627-2	YOKE UNIT	1				
020		632C14-5	ENDBELL COMPLETE	1				
021		815U77-6	DCO180 NAME PLATE	1				
022		266326-2	TAPPING SCREW 4X18	5				
023		419566-3	SWITCH KNOB	1				
024		187871-3	HOUSING SET	1				
	D10		INC. 29					
025		419519-2	SWITCH LEVER	1				
026		650579-7	SWITCH 1246.3223	1				
027		620308-2	CONTROLLER	1				
	C10	654037-5	INSULATED TERM. FT1.25-M3	1				
	C20	654077-3	INSULATED TERMINAL FK2-M3D-5.5	1				
	C30	654208-4	RECEPTACLE	2				
	C40	654281-4	RECEPTACLE	1				
	C50	654304-8	RECEPTACLE	2				
028		643860-3	TERMINAL	1				
029		187871-3	HOUSING SET	1				
	D10		INC. 24					
030		191971-3	CARBON BRUSH CB-430	1				
031		643929-3	BRUSH HOLDER CAP	2				
032		455183-5	HOLDER CAP COVER	2				
A01		763676-1	COLLET CONE 6.35	1			B2168	
A01-1		193453-1	DRYWALL GUIDE BIT 6.35 SET	1	<	B2168	Y09037	
A01-2		193447-6	DRYWALL GUIDE BIT 6.35 SET	1	O	Y09037		
A09		193449-2	DUST COLLECTION COVER	1		DD009		
F05-3		197600-6	BATTERY BL1830B SET	1	O	C4176		
F06-4		197599-5	BATTERY BL1830B SET	1	O	DF998		

A:DCO180Z(N)

Interchange
O : Yes
X : No
< : the new part can be substituted for the current.
> : the current part can be substituted for the new.
S : Interchangeable as a set.